Experiment No.5: Simplifying Logic Functions using KMAP	
Course Code: CPE 013	**Program: BSCpE22S2**
Course Title: Logic Circuits and Design	**Date Performed: 12/2/2026**
Section:	**Date Submitted: 12/2/2026**
Student Name: BULAONG, ROSS ANDREW **FLORENCIO, DAVID** **MALABANAN, NADINE** **QUE, JOSEF LEROY** **ZAPANTA, RUSSELL**	**Instructor: ENGR. Noel Lusung**

1. Objective(s):

- This activity aims to design combinational logic circuits using logic gates.
- Determine benefits of simplifying circuits using KMAP method.

2. Intended Learning Outcomes (ILOs):

The students shall be able to:

2.1 Apply the created combinational logic circuits to the TinkerCAD application.

2.2 Show the output of the simulated circuit using TinkerCAD simulation application.

2.3 Appreciate the importance of simplifying circuits in terms of economic factors.

3. Discussion:

A combinational circuit consists of input variables, logic gates, and output variables. The logic gates accept signals from the inputs and generate signals to outputs. This process transforms binary information from the given input data to the required output data. The input and output data are represented by binary signal that is, they exist in two possible values, either logic-0 or logic-1. A block diagram of a combinational circuit is shown in Figure 5-1. The n input binary variables come from an external source and the m output variables go to an external destination. There are 2 to the n combinations of binary input value for n input variables. A combinational circuit described by m Boolean Functions, one for each output variable. Each output function is expressed in terms of the n input variables.

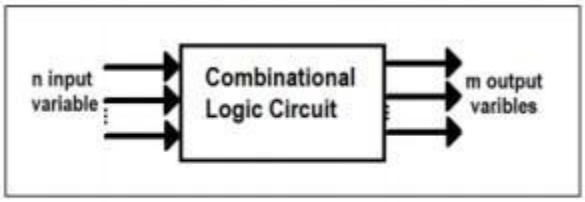

Figure 5-1. Block Diagram of Combinational Logic Circuit

4. Materials:
- Personal Computer - Internet connection Simulation Tools: o TinkerCAD o Logicly
5. Procedure:

1. Analyze the two given problems and determine the requirements (number of inputs and number of outputs) of the problem.
2. Assign codes or variables to the given conditions both for inputs and outputs.
3. Construct the truth table.
4. Simplify the output function using K-Mapping. Show this as your solution.
5. Draw the circuit diagram of the simplified equation.
6. Construct the circuit and simulate its operation in Logic.ly by verifying the input / output relationship.
7. Simulate the operation in TinkerCAD by connecting the inputs, wires, electronic components, and output correctly following the pin configuration of the ICs.
8. After the pasting an output screenshot and writing down the link for the uploaded video recording below, write the conclusion, and answer the questions on section 8.

Problem No. 1

Design a combinational logic circuit with four inputs A, B, C, and D and one output F. F is equal to logic 1 when A=1 provided B=0 or when B=1 provided that either C or D is equal to 1. Otherwise, the output is 0. Create a table named Table 5-1. Apply the possible input combinations and determine the simplified equation and its equivalent logic circuit design.

Problem No. 2

Design a circuit that would alarm a buzzer when the following conditions apply. Complete Table 5-2 and determine the simplified equation and its equivalent logic circuit design.

a. Switches A and B are on but switch C is off.
b. Switches C and B are on but switch A is off.
c. Switches A and C are on but switch B is off.
d. All switches are on.

Sample format of the Truth Table, K-MAP Solution, and Simplified Logic Circuit Diagram:

PROBLEM 1:
Truth Table:

INPUTS				OUTPUT (F)	
A	B	C	D	LED (ON or OFF)	Logic Value (0 or 1)
0	0	0	0	OFF	0
0	0	0	1	OFF	0
0	0	1	0	OFF	0
0	0	1	1	OFF	0
0	1	0	0	OFF	0
0	1	0	1	ON	1
0	1	1	0	ON	1
0	1	1	1	ON	1
1	0	0	0	ON	1
1	0	0	1	ON	1
1	0	1	0	ON	1
1	0	1	1	ON	1
1	1	0	0	ON	1
1	1	0	1	ON	1
1	1	1	0	ON	1
1	1	1	1	ON	1

Karnaugh Map:

AB \ CD	CD 00	CD 01	CD 11	CD 10
AB 00	0	0	0	0
AB 01	0	1	1	1
AB 11	1	1	1	1
AB 10	1	1	1	1

Patterns for Karnaugh Map:

AB \ CD	CD 00	CD 01	CD 11	CD 10
AB 00	0	0	0	0
AB 01	0	1	1	1
AB 11	1	1	1	1
AB 10	1	1	1	1

= A

AB \ CD	CD 00	CD 01	CD 11	CD 10
AB 00	0	0	0	0
AB 01	0	1	1	1
AB 11	1	1	1	1
AB 10	1	1	1	1

= BC

AB \ CD	CD 00	CD 01	CD 11	CD 10
AB 00	0	0	0	0
AB 01	0	1	1	1
AB 11	1	1	1	1
AB 10	1	1	1	1

= BD

Simplified Logic Expression: A + BC + BD = F

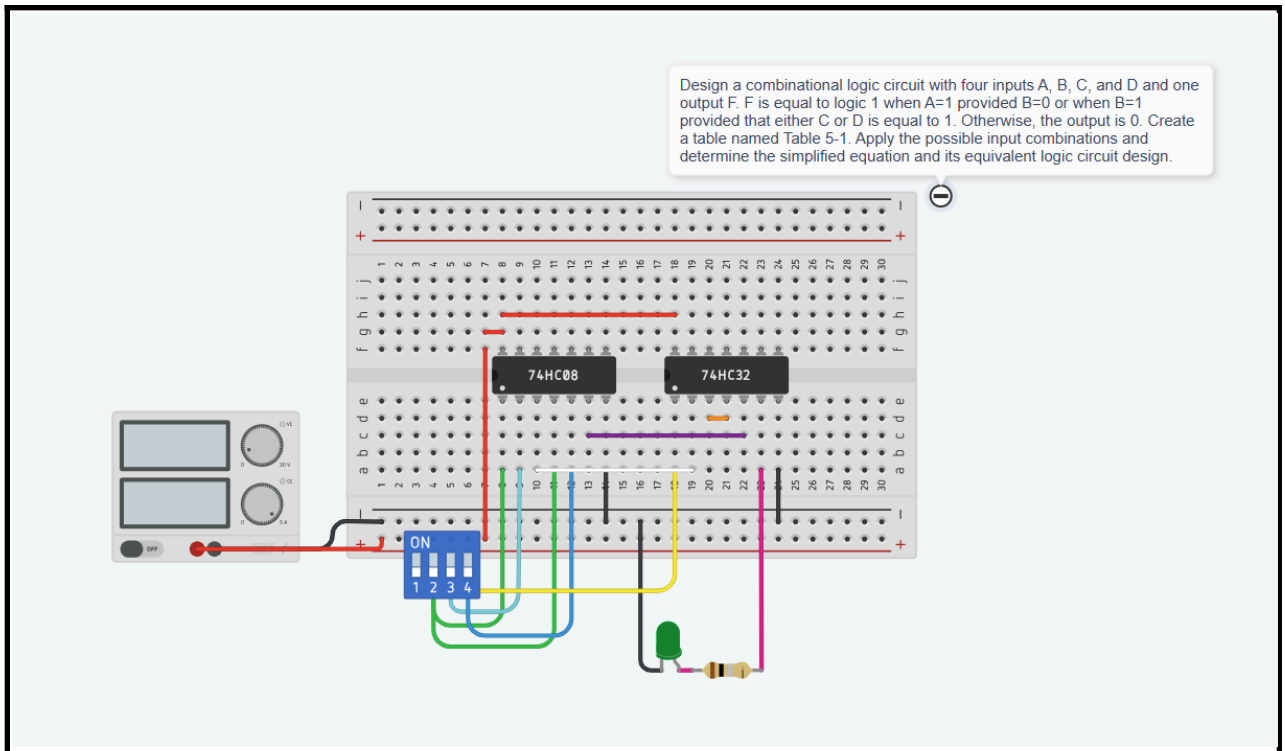

TinkerCAD Circuit

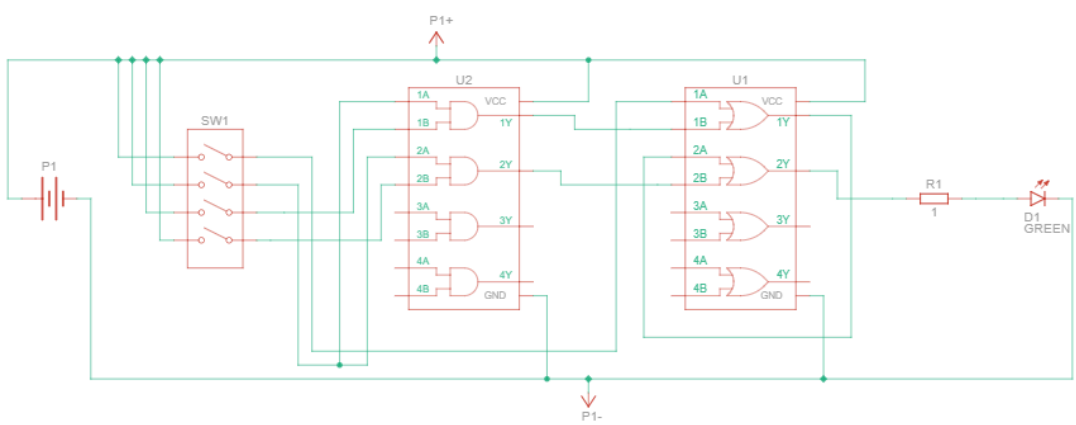

Circuit Diagram

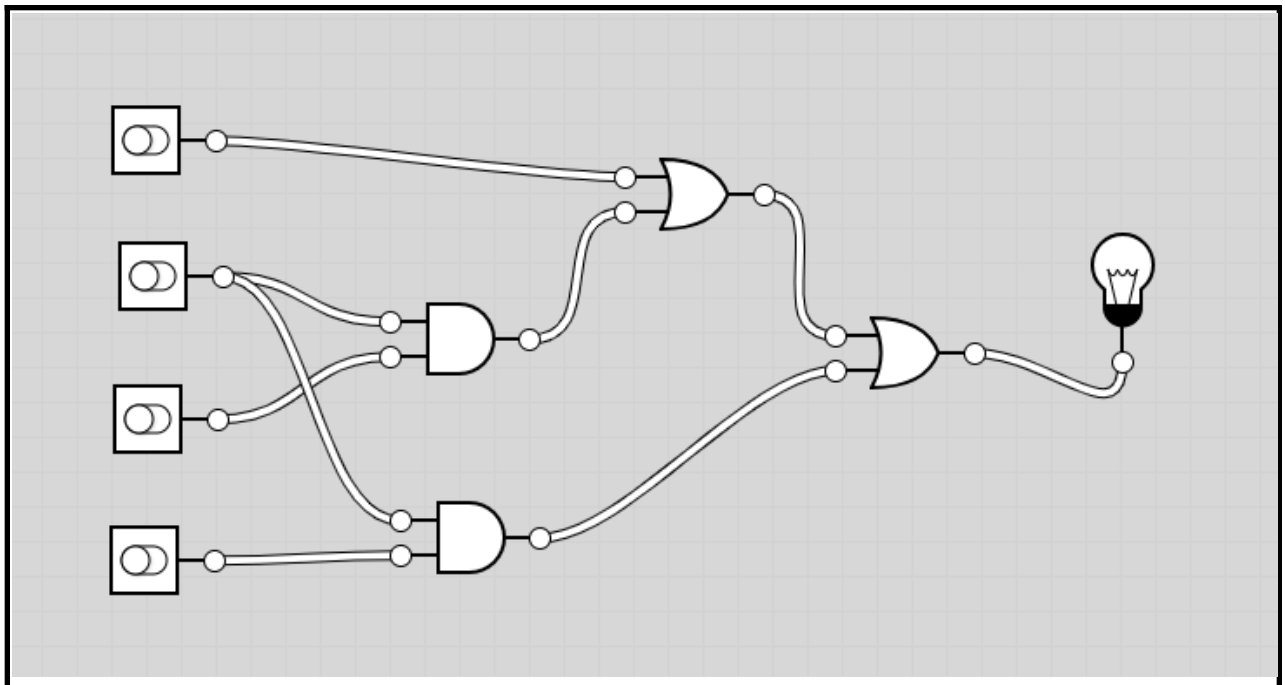

Simplified Logic Diagram

PROBLEM 2:
Truth Table:

INPUTS			OUTPUTS (F)	
A	B	C	LED (ON or OFF)	Logic Value (0 or 1)
0	0	0	OFF	0
0	0	1	OFF	0
0	1	0	OFF	0
0	1	1	ON	1
1	0	0	OFF	0
1	0	1	ON	1
1	1	0	ON	1
1	1	1	ON	1

Karnaugh Map:

A\BC	BC 00	BC 01	BC 11	BC 10
A 0	0	0	1	0
A 1	0	1	1	1

Patterns for Karnaugh Map:

A\BC	BC 00	BC 01	BC 11	BC 10
A 0	0	0	1	0
A 1	0	1	1	1

= AB

A\BC	BC 00	BC 01	BC 11	BC 10
A 0	0	0	1	0
A 1	0	1	1	1

= AC

A\BC	BC 00	BC 01	BC 11	BC 10
A 0	0	0	1	0
A 1	0	1	1	1

= BC

Simplified Logic Expression: AB + AC + BC = F

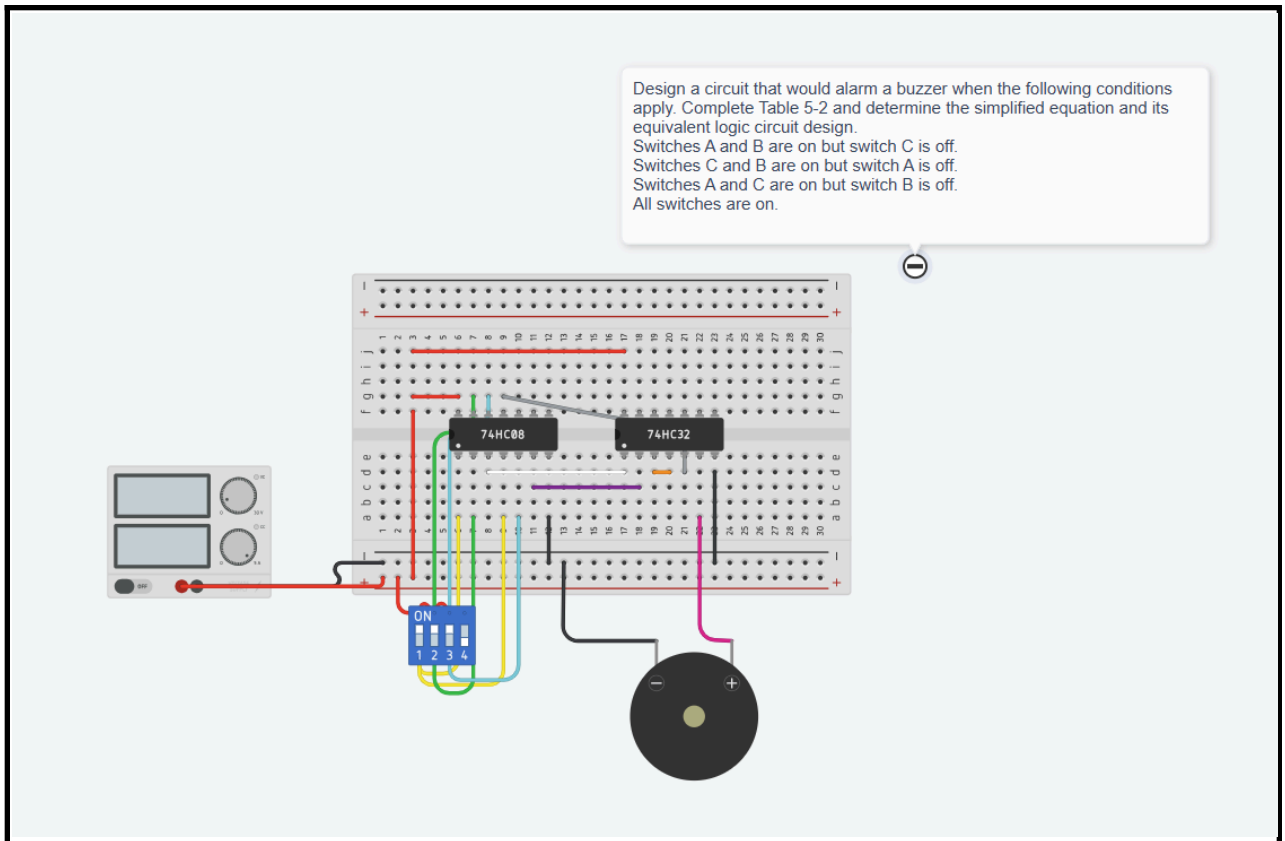

TinkerCAD Circuit

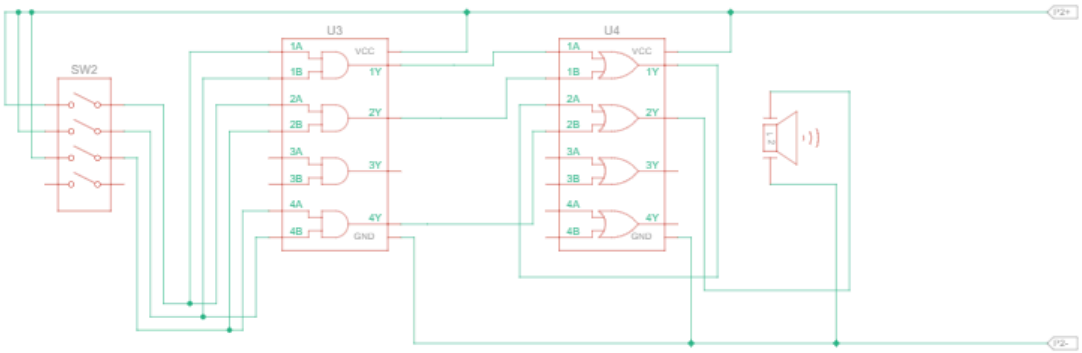

Circuit DIagram

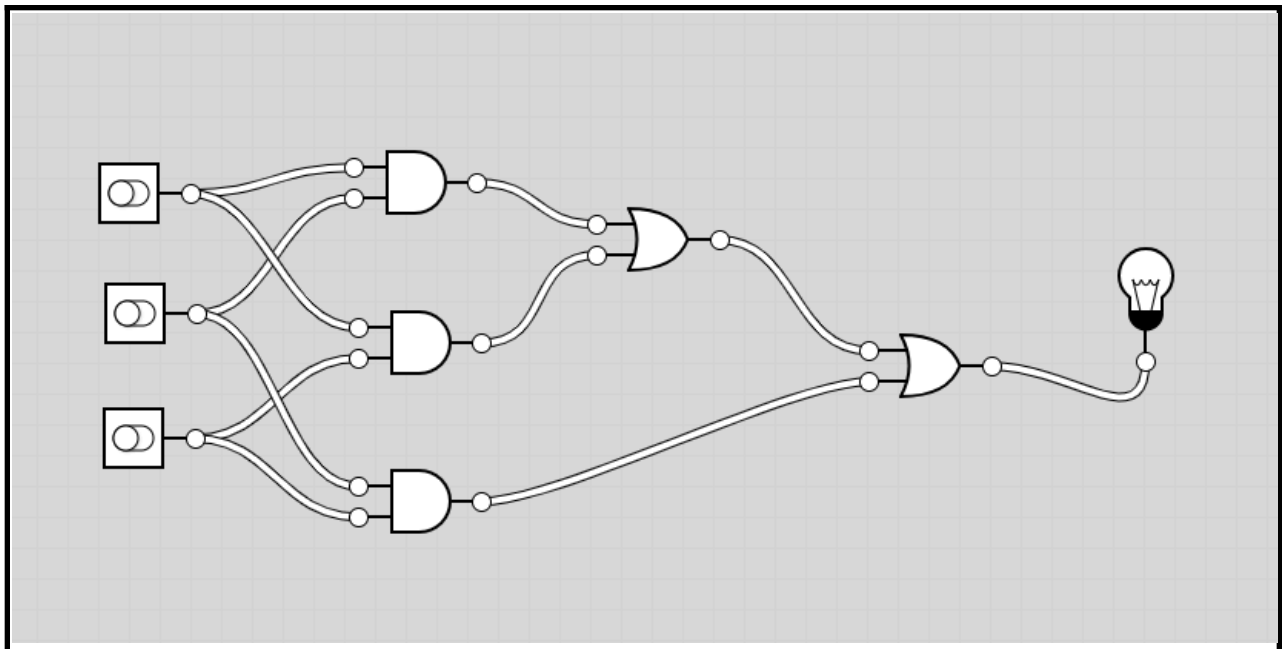

Simplified Logic Diagram

6. Final Output: Screenshot or print screen of TinkerCAD application different output simulations (5 points deductions for only one output in every required circuit). Also, upload a video of the simulated circuit naming or talking about the shown input combinations. Failure to comply to each instruction will resulted to 5 points deductions. Please include the recorded simulation video in this section and write at least one sentence definition or label for each figure or image.

TINKERCAD LINK: https://www.tinkercad.com/things/l6qUxCcyW3d-k-map-application

7. Conclusion:

Also, write a one paragraph (at least 10 sentences) Conclusion for this activity.

We learned that simplifying the logic function reduces the number of gates in the circuit. Because of that, the circuit becomes more simple and easier to connect .We also test our circuit in logicly and tinkercad to check if our answer is correct. The simulation really helps us see clearly how the inputs affect the output.

With the help of truth tables and karnaugh maps, we can easily generate a boolean expression which is the base start when we are trying to build a circuit. This process is crucial when we are trying to put constraints on our desired circuit which is why learning these would make us efficient and effective especially for designing our circuit projects.

8. Questions:

1. What is the importance of K-Mapping?

   The importance of K-Mapping is that it is used to simplify Boolean expressions. Instead of having a long and complicated logic equation with many terms, the K-Map makes it shorter and easier to understand. Because of this, it helps simplify logic circuits and reduce the number of logic gates needed.

2. Is this worded problem can be applied in a real-world scenario? Explain.

   Yes, this kind of problem can be applied in real life situations. For example, it can be used in security systems or alarm systems where some conditions must be met first before the output will turn on or activate. In Problem No. 2, the buzzer alarm is a good example because it only turns on when the correct switch combination is satisfied, just like how automatic doors, traffic lights, and safety systems works, so combinational logic circuits are really useful in real electronic and computer systems.

3. Identify how much it would cost for a circuit using a non-simplified version? How about a simplified version?

   A non-simplified circuit cost more because it use more logic gates, ICs, and wires, and sometimes it even need multiple chips. When the circuit is simplified, it only need fewer gates and materials, so the cost and power consumption becomes lower. Even if the exact price depends on the components, the simplified circuit is still more practical and economical.

8. Assessment: (Check the attached rubric in this task as the basis of the scores)

Laboratory Performance Rubric (2)

Criteria	Ratings			Pts
Manipulative Skills	**3 pts** **Proficient** Student always demonstrate needed skills.	**2 pts** **Acceptable** Student occasionally demonstrate needed skills.	**1 pts** **Beginner** Student do not demonstrate needed skills.	3 pts
Experimental Set - up	**3 pts** **Proficient** Student are able to set-up the material with minimum supervision.	**2 pts** **Acceptable** Student are able to set-up the materials with supervision.	**1 pts** **Beginner** Student are unable to set-up the materials.	3 pts
Process Skills	**3 pts** **Proficient** Student always demonstrate targeted process skills.	**2 pts** **Acceptable** Student occasionally demonstrate targeted process skills.	**1 pts** **Beginner** Student do not demonstrate targeted process skills.	3 pts
Application of Technical Writing Skills	**3 pts** **Proficient** Correct spelling, grammar, and sentence construction when writing the Discussion, Observation, and Conclusion are applied in the laboratory report.	**2 pts** **Acceptable** Some minor incorrect spelling, wrong grammar, and wrong sentence construction when writing the Discussion, Observation, and Conclusion are applied in the laboratory report.	**1 pts** **Beginner** Many incorrect spelling, wrong grammar, and wrong sentence construction when writing the Discussion, Observation, and Conclusion are applied in the laboratory report.	3 pts
Time Management / Conduct of Experiment	**3 pts** **Proficient** Student finish ahead of time with complete data and time to revise data.	**2 pts** **Acceptable** Student finish on time with incomplete data.	**1 pts** **Beginner** Student do not finish on time with incomplete data.	3 pts
Complete Requirements of Laboratory Report	**3 pts** **Proficient** Student submitted a complete requirements set by the teacher.	**2 pts** **Acceptable** Student submitted an almost complete Laboratory Report according to requirements set by the teacher.	**1 pts** **Beginner** Student submitted a lot of missing requirements in the Laboratory Report according to requirements set by the teacher.	3 pts
Follow the Correct Format of Laboratory Report	**3 pts** **Proficient** Student submitted a correct format of Laboratory Report according to requirements set by the teacher.	**2 pts** **Acceptable** Student submitted an almost correct format of Laboratory Report according to requirements set by the teacher.	**1 pts** **Beginner** Student did not follow at all the format of Laboratory Report according to requirements set by the teacher.	3 pts
Ability to do independent work	**3 pts** **Proficient** Student do not need to be supervised by the teacher.	**2 pts** **Acceptable** Student require occasional supervision by the teacher.	**1 pts** **Beginner** Student require supervision by the teacher.	3 pts
				Total Points: 24